Distributed by:

Macdon D60 (CA20) - D65 (CA25) - D/FD1 (FM100) - D/FD2 (FM200)

Operation and adjustment: i-paddock Typhoon Feed Drum

Retractable finger timing

Marking a significant improvement over other feed drums, Typhoon allows you to easily and repeatably adjust the retractable finger timing through a broad range of 150 degrees.

To set the timing, loosen the nut on the quick set adjusting arm, adjust it to the desired position, then tighten the nut again. If the lever becomes tight over time, a 1/2" square hole is provided to allow more leverage with a socket drive bar. Read the arm position against the top edge of the arm, as indicated by the arrow shaped hole in the arm.

The recommended initial quick-set position for the retractable fingers is at position 7. In this setting the fingers reach maximum extension at about 45 degrees after (forward from) top dead centre, allowing them to be fully retracted by the time they are coming up the back side of the rotation, which minimizes the chance of catching crop and creating repeats over the drum.

If you experience repeating you should advance the finger timing. This is done by setting the timing lever to a lower position number. Most feeding issues are a result of excessively retarded finger timing.

Light and droughted crops

In very short and light crops it may be an advantage to retard the finger timing (i.e., increase the setting number) to maximize the length of the fingers at the bottom of the stroke.

If light crop material is perching on the deck in front of the Typhoon, adding sections of corflute (or similar plastic or rubber batts) to the reel fingers with self-tapping screws may help move the material further towards the back of the mats, while creating a fan effect in the centre, both of which help to minimize this issue.

Canola and bulky/fluffy crops

To maximize the speed benefits of the Typhoon in canola and bulky crops, we strongly recommend adding 100mm rubber paddles to the steel paddles in the centre of the standard Macdon top cross auger. Modifying the brackets to move it forward and down by 50-75mm is also helpful.

NOTE: Ensure that the paddles cannot touch the flighting on the Typhoon when it floats up over lumps and obstacles.

Advancing the finger timing (i.e., reducing the setting number) may be useful in crops that sit up very high in the front.

General settings

Other recommended initial settings include setting the height of the Typhoon so that the flighting has approximately 10mm clearance above the metal deck. With the increased depth and width of slot created by the Typhoon compared to the factory feed drum, you it is not necessary to raise the height of the Typhoon, even in heavier crops.

NOTE: Always check the height of the Typhoon above the deck with the front lifted on the feeder house and tilted fully forwards, as it may touch the deck even when it was clearing the deck when adjusted on the comb trailer.

The genuine Macdon downforce spring tension kit is strongly recommended, as are the Macdon concave shaped deflectors behind the outer flights on the Typhoon.

Slip clutch and reversing clutch.

There have been instances of farmers believing the slip clutch in their Macdon front has failed when the issue was coming from the poor feeding of their feed drum. In many instances it has not been necessary to replace the slip clutch once the new Typhoon is fitted.

However, if you still experience regular blockages which cannot be resolved using the settings mentioned above, the slip clutch in the Macdon adaptor drive casing may need to be replaced. Unlike the Macdon factory feed drum, the Typhoon does not have or require an internal reversing clutch.

Narrow body machines

The Typhoon has been optimized for providing a full width feed into standard "wide body" feeder houses. For optimum performance on a "narrow body" feeder house it is recommended that you add flighting extensions to the inner ends of the outer flights. Please contact us if you require the extensions.

Fitting instructions: i-paddock Typhoon feed drum

(Right and left refer to as looking forward on the machine)

To remove the original feed drum:
It is not necessary to remove the adapter for this job. However, it will be necessary to remove the front from the feeder house of the header (combine) to allow access from both sides of the drum. Raising the reel will also allow for more mobility when working from the front.

Attach a lifting strap in the centre of the drum from the top main beam of the draper front.

Strap for better maneuverability of the drum

Remove the plastic covers and bump stops if fitted from both ends of the feed drum to have a clear view of the drums fasteners.

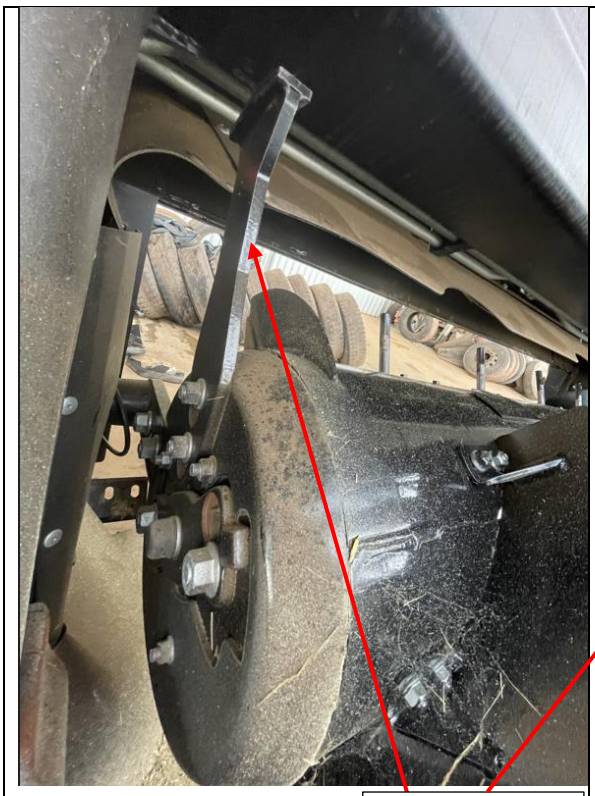

Bump Stops

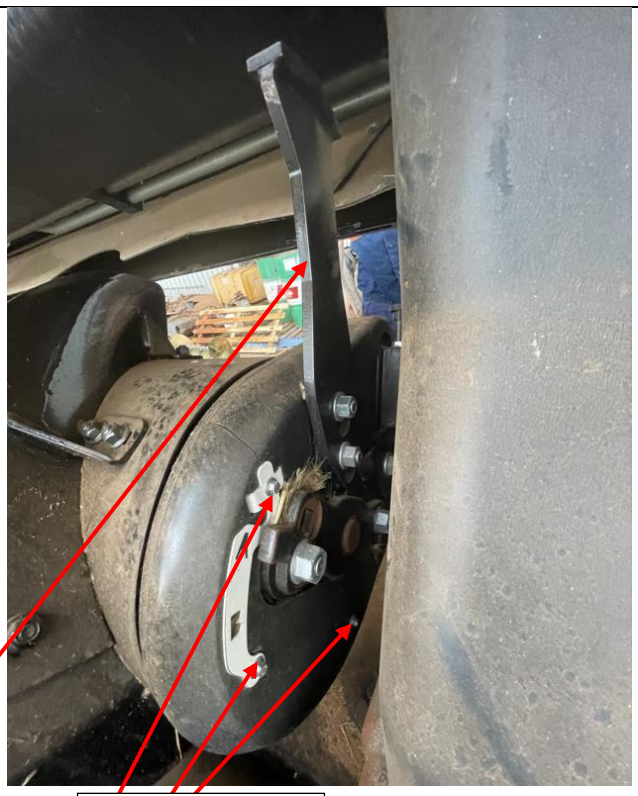

Plastic cover bolts

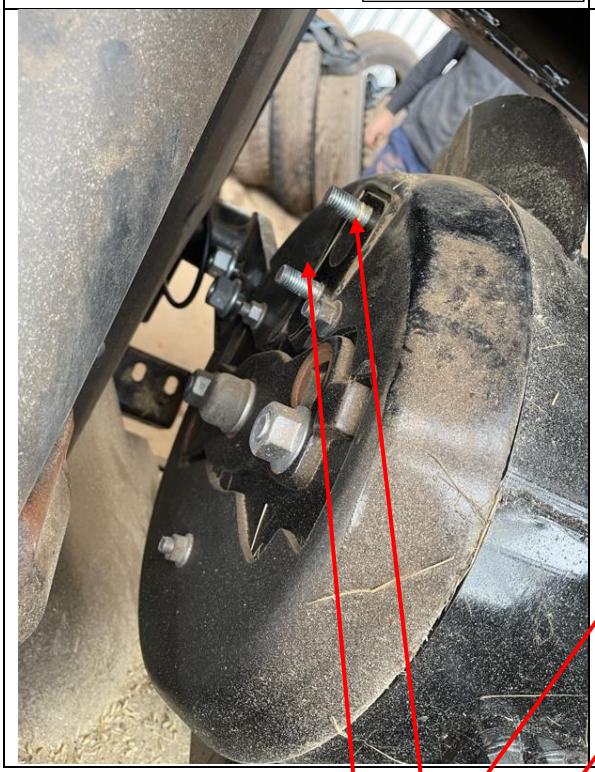

Bump Stop bolts

D65/D1/D2: Loosen (but do not remove) the 2 large Cuphead bolts attaching the feed drum to the drive end swingarm. Open the inspection cover on the left (drive) end.
Remove the torx head sprocket retainer from the drive sprocket.

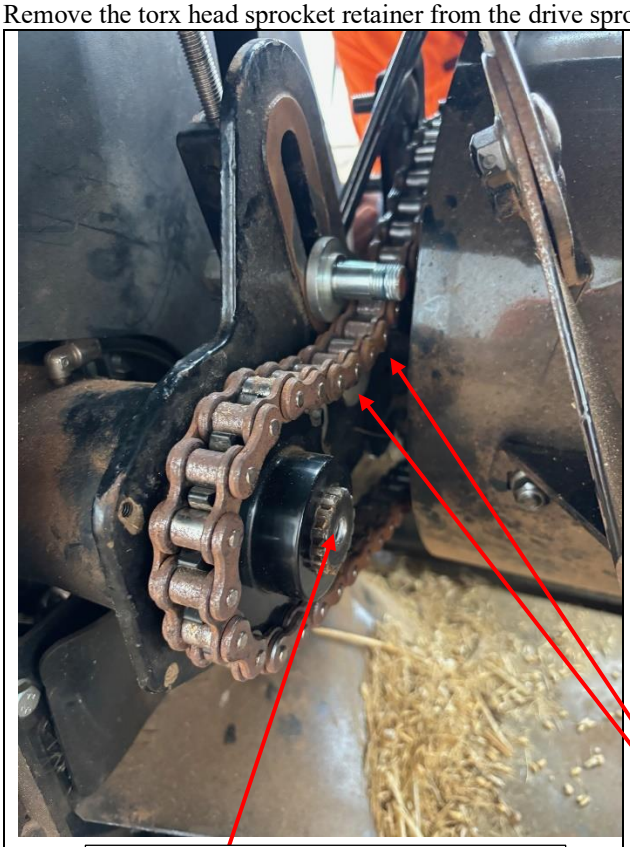

Torx head Sprocket Retainer Removed

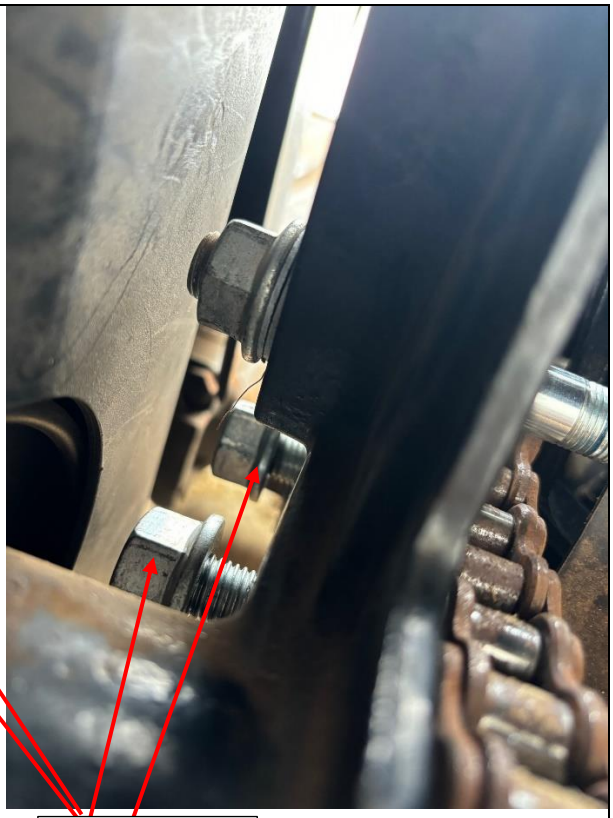

Cuphead Bolts

Undo the fasteners holding the right end of the drum to the support swingarm, then move the swingarm outwards, away from the drum taking care not to bend the arm during this action.

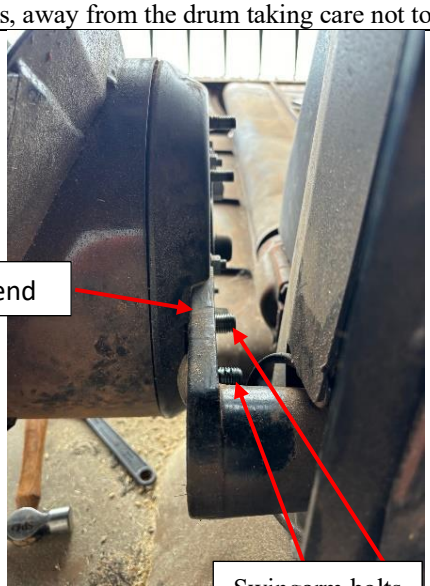

Do not bend

Swingarm bolts

Move the right end of the drum forward and right, to slide the drum off the stub shaft at the drive end. Take care not to damage the draper mats with the drum flighting by using a protective cover such as a sheet of plywood.
The drive sprocket will slide off the splined drive shaft together with the driven sprocket and chain. Note the offset orientation of the drive sprocket.

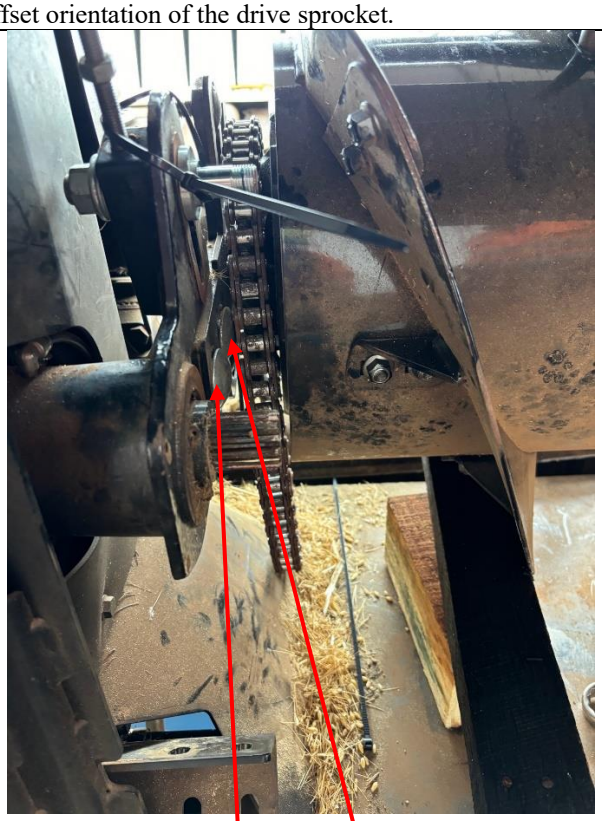

Ensure Cuphead bolts removed

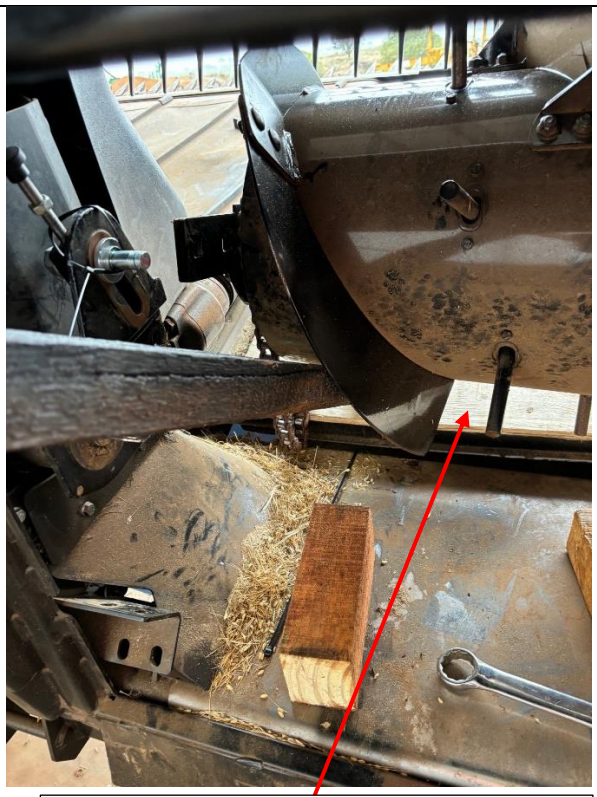

Sheet of plywood protecting draper mats

After removing the feed drum, remove the bearing retaining nut, the pitman arm, and the key from the drive end stub shaft. Remove the bolts attaching the cast "spider" to the drum at the left (drive) end.
Leave the spacer washer on the stub shaft, to be used with the Typhoon bearing hub.
Discard the bump stop spacer plate if fitted found on the right end of the Feed drum.

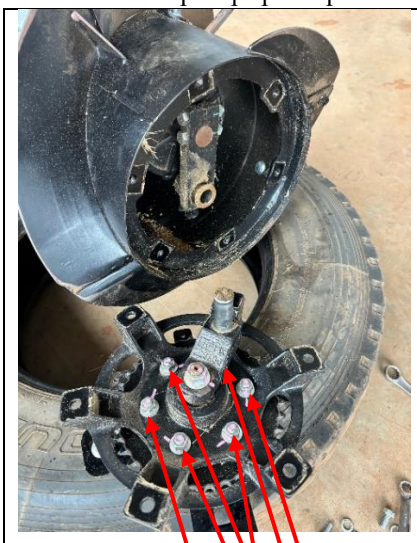

Cast “Spider” bolts

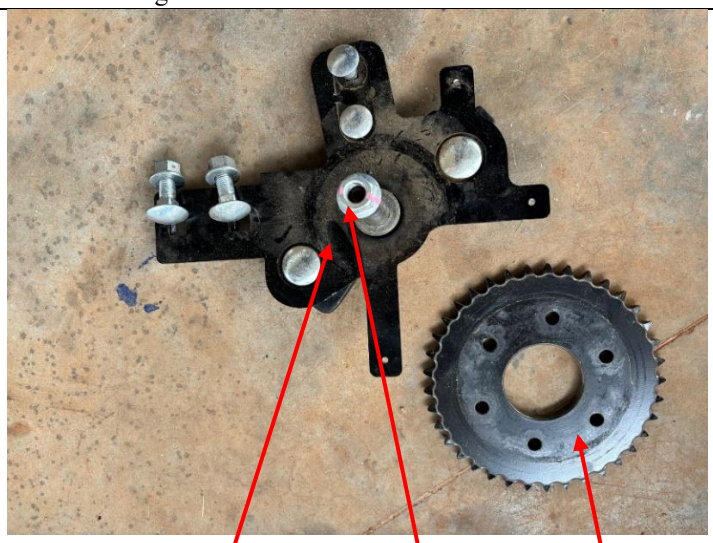

Pitman Arm

Bearing retaining nut

Sprocket

D60: Remove and discard the original half circle plastic lip (Part 16 in Figure 1) which sat to the rear side of the drum on the drive end.

Open the inspection cover on the left (drive) end of the original drum, remove the left end bearing nut locking tab (Part 7 in Figure 1) and remove the bearing nut (Part 3 in Figure 1). (Place a clean rag under the stub shaft to catch the bearing in the next step)

The inner bearing (Part 4 on the left hand side) will fall off the stub shaft into the drum. It is important to keep this clean if you intend to reuse this bearing. If it is worn or damaged, you should replace it with a new bearing.

Leave the rear bearing (Part 4 on the right hand side) on the stub shaft to be used with the Typhoon.

You can now manoeuvre the drum out through the rear opening of the adaptor.

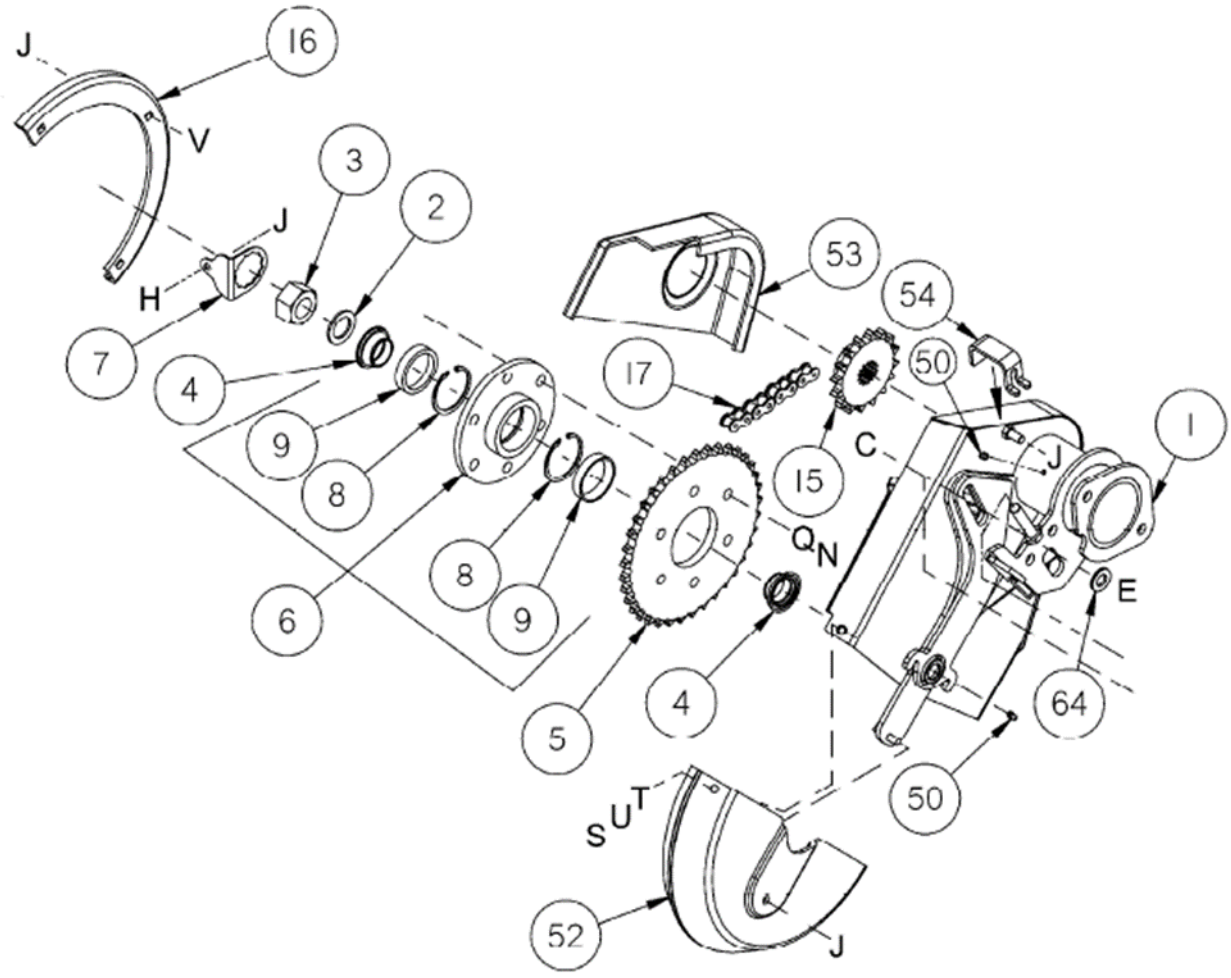

Figure 1: D60 assembly for reference

To fit the new i-paddock Typhoon:
Fitting the i-paddock Typhoon is the reverse of the removal steps, with note of the following points:

D60:
Fit the sprocket and bearing hub (Part 6 in Figure 1) from the original feed drum to the Typhoon. Use Loctite on the threads and no washers.

D65/D1/D2:
Fit the original sprocket with the new supplied bearing hub to the typhoon. Use Loctite on the threads and no washers. Fit the bearing retaining nut to the stub shaft firmly which will be tightened later.

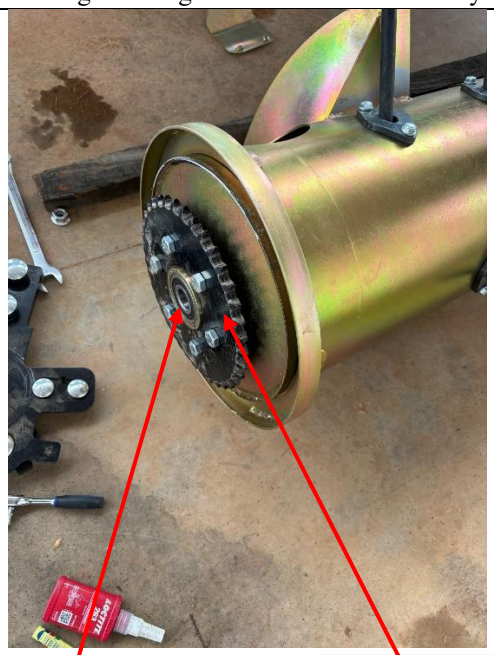

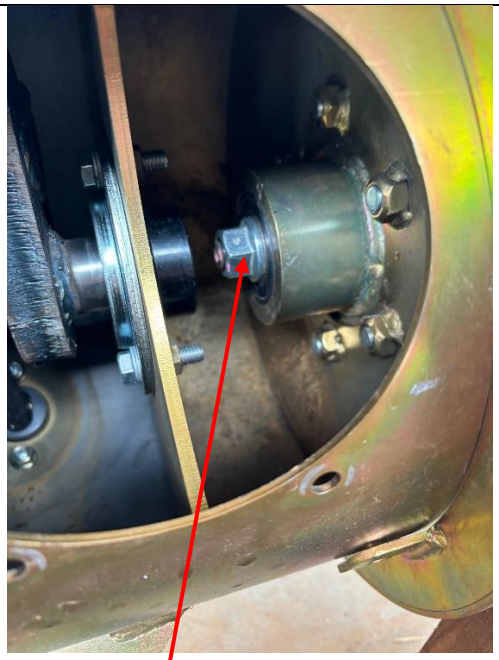

Securing the timing lever and timing end plate to the shaft using the ½" bolt provided, align the hole in the crankshaft with the hole on the handle.

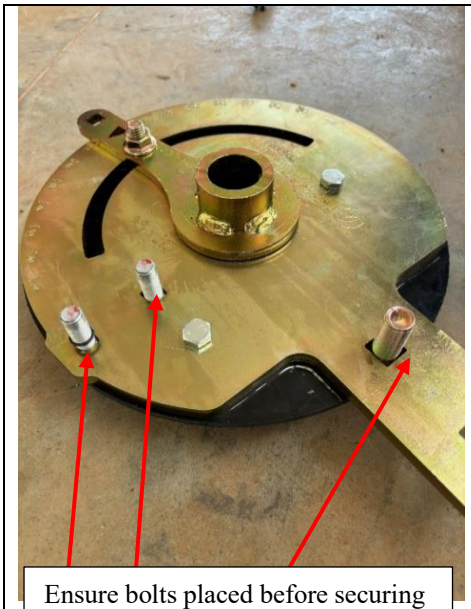

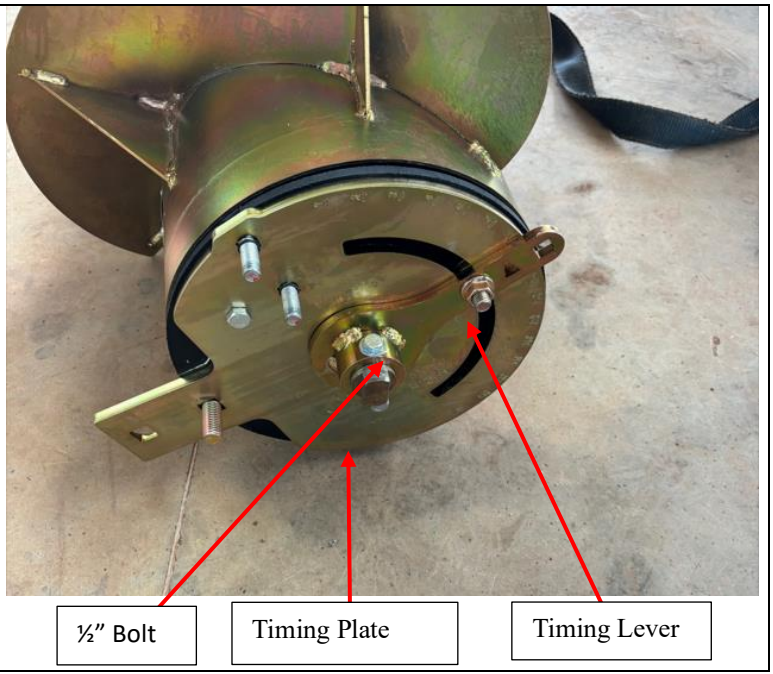

Note: If upgrading to the new crank handle on an older model drum the crankshaft hole will need to be drilled out to suit the larger 1/2 "bolt rather than the previous stepped version. Additionally, the new crank handle contains a short screw to ensure the correct orientation of the handle which will either need to be removed or a small flat section grinded onto the crankshaft to suit the screw.
If installing the old crank handle onto a newer model drum the crank handle hole will need be to be drilled out to suit the ½" bolt. Likewise, if your mounting plate does not have the appropriate holes for the bump stop or end plate, please refer to page 18 for instructions on how to drill them yourself.

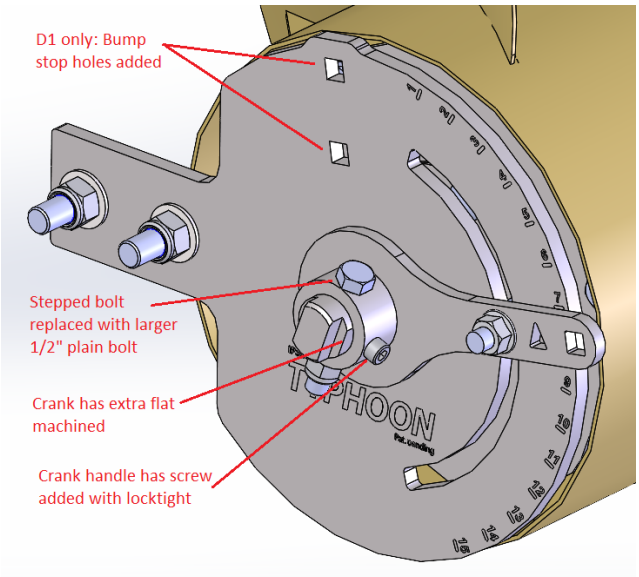

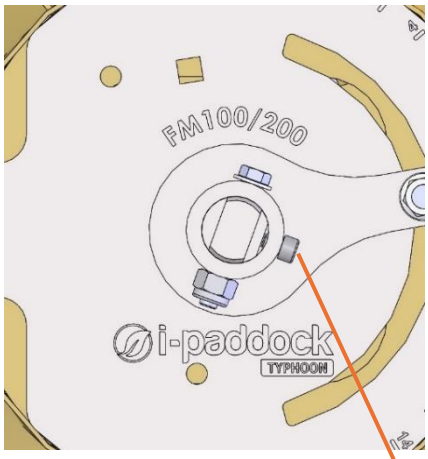

Note: Screw does not need removing to replace handle. Align screw with flat section of shaft to ensure handle in correct

Manoeuvre the Typhoon into the opening from the rear using a supporting lifting strap placed in the centre of the drum like when removing the Macdon drum.
Move the right end of the Typhoon drum right and forward before aligning the drive end bearing over the stub axle. Fit the sprocket and attached chain onto the spline by manoeuvring the Typhoon drum left.

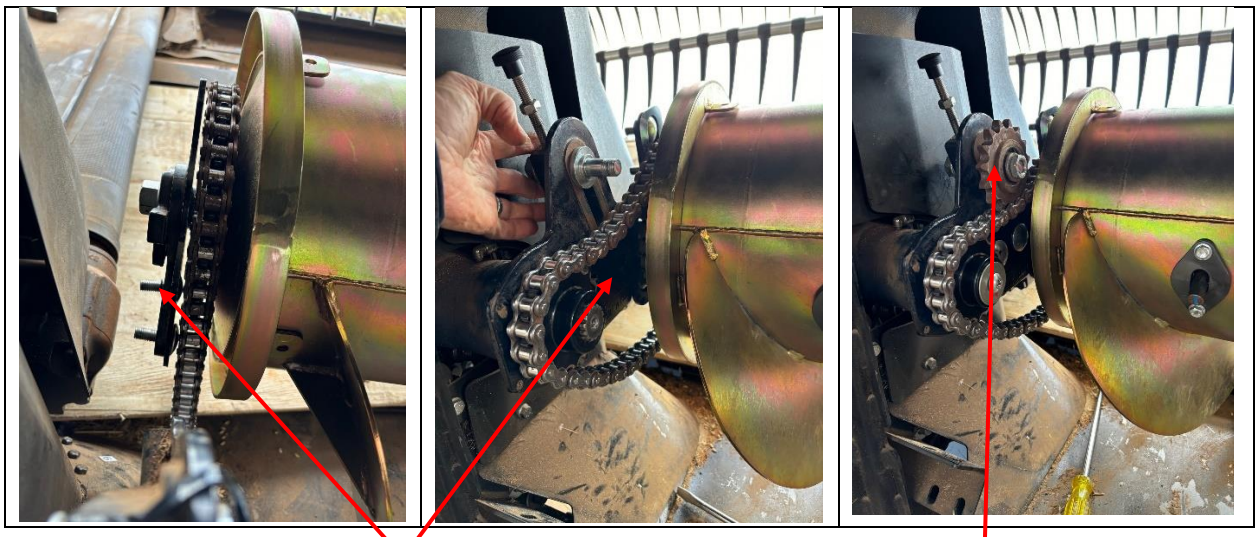

D60:

Put the internal tapered bearing, washer and nut onto the stub and do the nut up loosely to still allow some fore/aft swing of the drum while completing the installation.

Slot the right side of the Typhoon drum into the bracket and tighten fasteners on both the left and right end of the Typhoon drum. Take care not to bend the swingarm during this action.

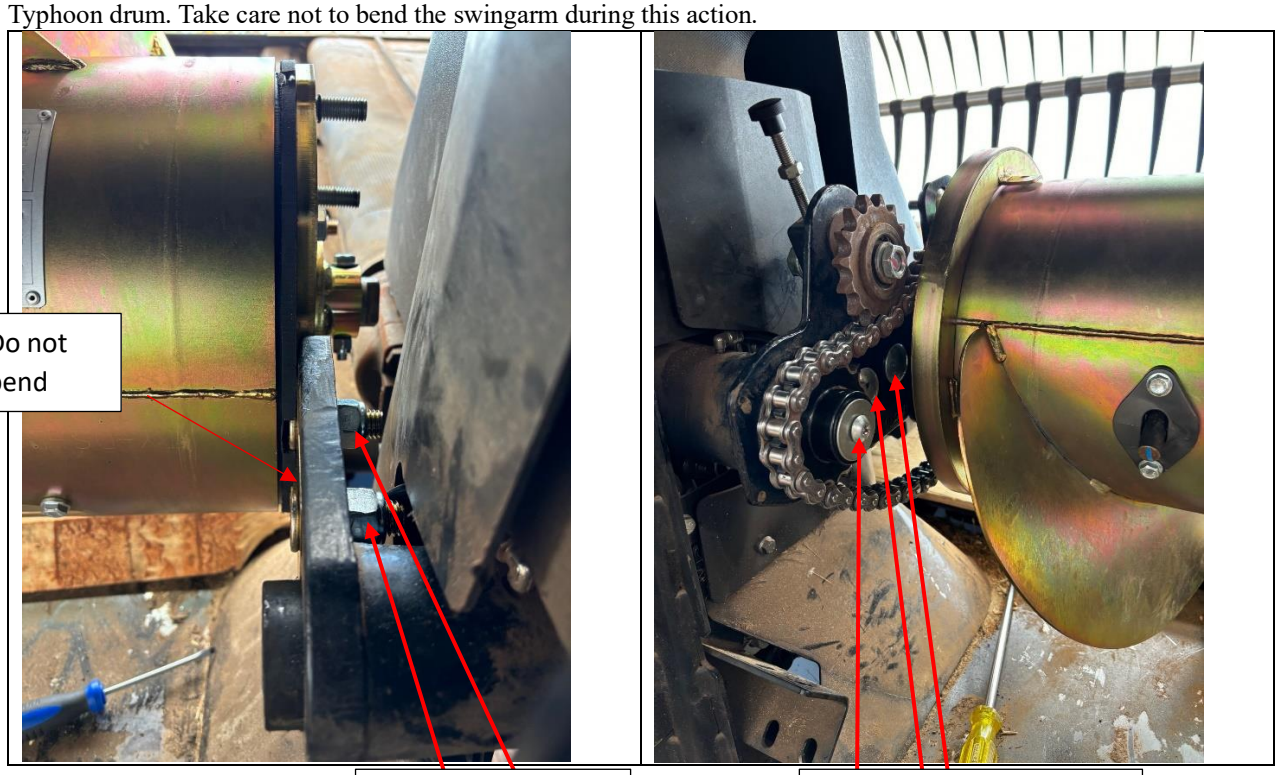

Once both sides of the drum bra ned tighten the the plastic cover as previously found.

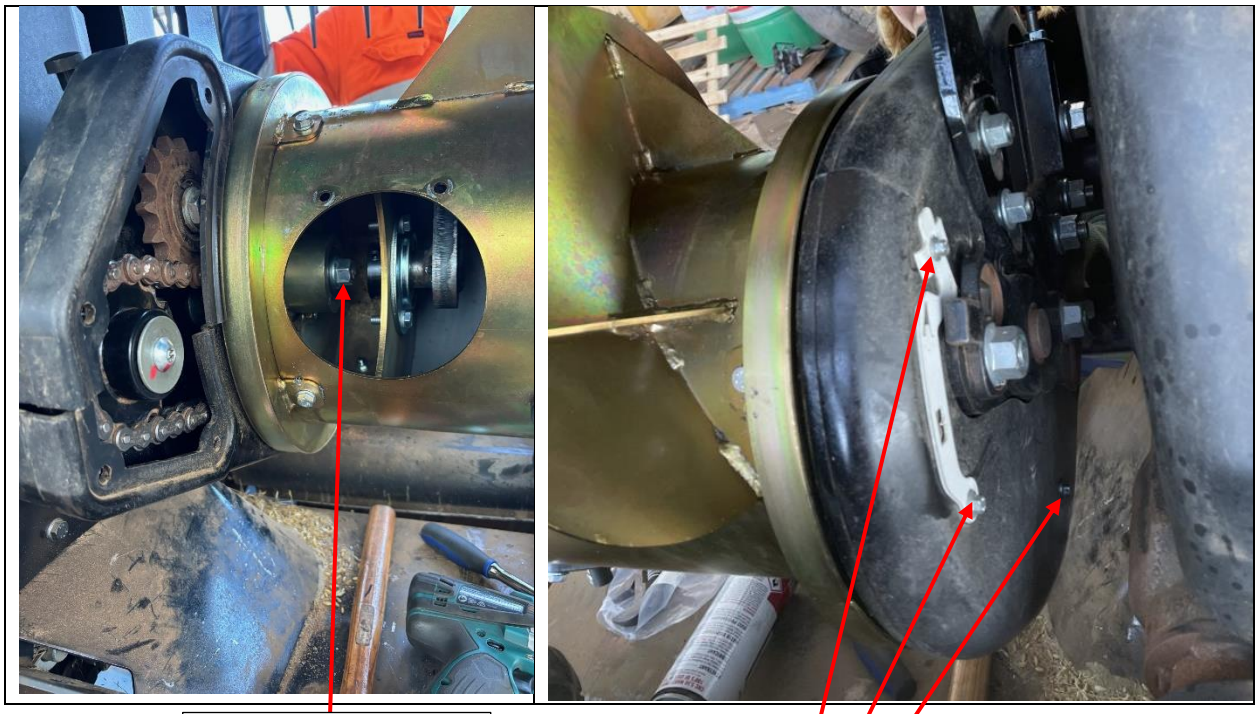

For the D1/D2 Models only:
Bump stop holes have been added to the plate design allowing for the original bump stops to be reused with the Typhoon as shown below.

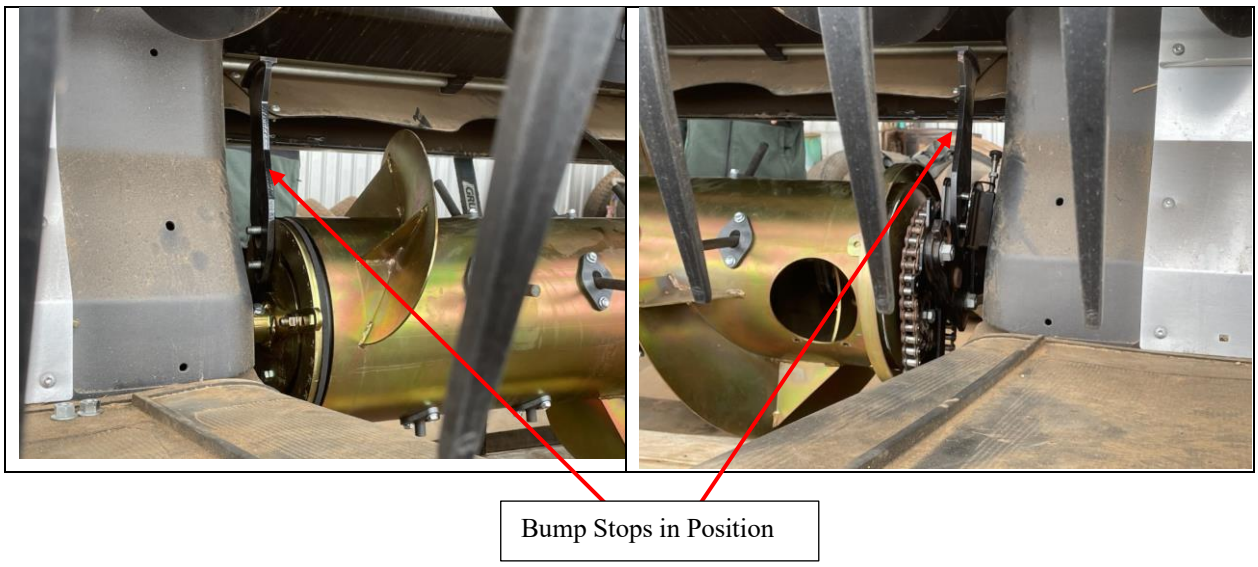

Shown below is a front and rear view of the finished fitment.

IMPORTANT: The correct orientation of the quick set retractable finger timing mechanism is critical for correct performance of your Typhoon feed drum. When positioned correctly, in the recommended position 7 the

retractable fingers should be fully extended 45 degrees forwards from top dead centre. This must be checked once the Typhoon has been installed.

D60: Inspect the original right end support for hairline cracks. It is recommended to weld reinforcing plates onto this support, which is known to crack where the small triangular section is welded to the larger plate. For extra support for the original Macdon bracket, drill a hole in the original right-hand support and add an extra bolt through the hole provided on the new Typhoon quick-set timing plate. Attach the quick-set timing end plate to the original right hand swingarm support. The original plastic covers are not required for the Typhoon.

D60: Tighten the drive end bearing retaining nut enough to remove end float, taking care not to over tension the bearing. Lock the nut using the original locking tab, with a ½" nut as a spacer under the cotter bolt that secures the locking tab to the original stub shaft.

D65/D1: The replacement bearing hub uses two bearings with a spacer which prevents excess bearing preload. Tighten the self-locking bearing retaining nut fully against the inner bearing.

Install and tighten all fasteners at both ends.

IMPORTANT: RISK OF FIRE OR DAMAGE: check for a clear gap at both ends of the drum to ensure that no brackets, fasteners or covers rub on the drum when rotating.

Check that the retractable finger timing is fully extended 45 degrees forward to top dead centre with the timing lever set at position 7.

The i-Paddock Twister is designed to adjust, and then lock the feed drum drive chain tensioner in position on Macdon D60 (CA20) and D65 (CA25) draper fronts with Typhoon feed drums, Turbodrums, or the original Macdon feed drum fitted.

Installation:

- Remove the plastic cover over the drive sprocket at the rear of the left side of the feed drum.
- Undo and remove the chain tensioner sprocket and bolt. Note the position of spacers, washers etc.
- Replace the original bolt with a 3" x 5/8" bolt (insert the new bolt in the sprocket bearing so the nut is outwards), refit any washers, spacers etc. Fit the sprocket and bolt back into the mounting slot.
- Fit the Twister with the cam slot over the threaded end of the bolt from the outside (left side) of the housing. Ensure the Twister spigot pin is in the top of the original adjustment slot.
- Fit the original self-locking flange nut to the bolt, which will be used to clamp the Twister in position and adjust the nut to a loose fit.
- Rotate the Twister with your hand to push the tensioner downwards via the cam shaped track in the Twister. The Twister design creates high torque with hand effort only. Take care not to over tension the chain.
- Once the correct chain tension is achieved, tighten the nut as tight as possible with appropriate hand tools. There should be a small amount (5-10mm) of loose vertical play on the lower side of the chain.
- Re-check the chain tension before refitting the cover. Note: Some D65 models may need the cover to be trimmed slightly to fit back on with the Twister installed.

DIMENSIONS IN MILLIMETRES
DO NOT SCALE

ITEM NO.	QTY.	PARTNO	DESCRIPTION / MATERIAL
1	1	TY-DS	DRUM SHELL
2	1	TY-BMP	BEARING MOUNTING PLATE
3	25	TY-FR-MD	FINGER
4	25	TY-FH-KIT	FINGER HOLDER ASSEMBLY
5	25	TY-FG-KIT2	FINGER GUIDE KIT, HD
6	4	TY-IHC2	INSPECTION HATCH COVER
7	8	B-M08-020-FL-G88	HEX FLANGE BOLT - M8 x 20MM G8.8 ZP
8	1	TY-ICS-2	INTERNAL CRANK SHAFT
9	2	BRGH-PF72	BEARING HOUSING - FLANGE 3 BOLT PRESSING
10	2	BRG-YET207	BEARING
11	3	B-1114-38-UNC-G5	HEX BOLT 3-8" x 1,1-4" UNC G5 ZP
12	6	B-WM10-NL	NORD-LOCK WASHER - M10, ZP
13	3	B-NM10-NYL	NUT - NYLOC M10 Z/P
14	4	B-1114-12-UNC-G5	HEX BOLT 1-2" x 1,1-4" UNC G5 ZP
15	4	B-WM12-NL	NORD-LOCK WASHER - M12, ZP
16	4	B-N12-UNC-NYL	NYLOC NUT - 1-2" UNC
17	3	B-M10-030-CH-G88	CUP HEAD BOLT M10 x 30MM G8.8 ZP

FINGER STARTER KIT
PART NUMBER: TY-FR-KIT-MD-BN

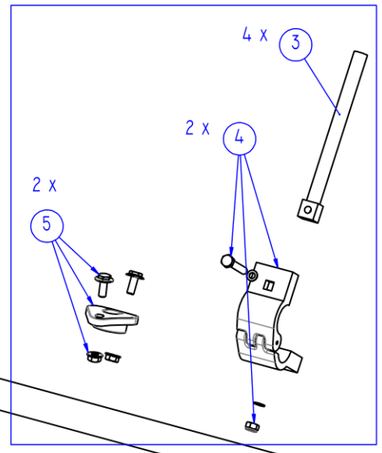

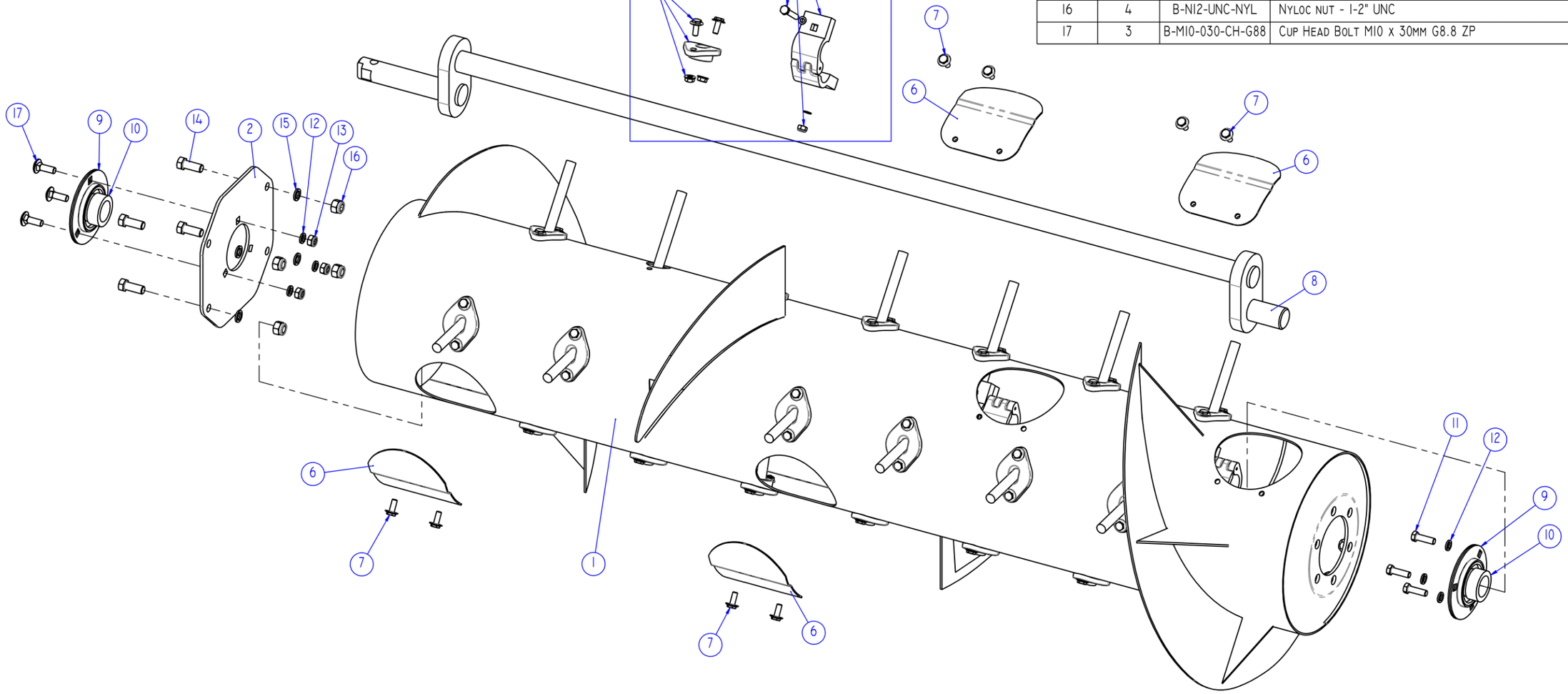

REV.	DRAWING REVISION	DATE	BY	CHKD
A	ITEMS 5, 6, 7, 13 CHANGED, 11 QTY REDUCED, 17 ADDED	11/09/2024	SBJ	SBJ

DRAWING NOTES:

© COPYRIGHT
IP Machinery Pty Ltd 2020.
All Rights Reserved.

TITLE	IPM TYPHOON DRUM ASSEMBLY FOR INSTRUCTIONS		
DRN BY	SBJ	DRN DATE	11/8/2021
PART NO	TY-DA-2	WEIGHT(KG)	77.0
CHKD BY	MF	CHKD DATE	11/8/2021
DRAWING NO	TY-DA-2-INS	REVISION	A

A3

C:\USERS\JOHNSTON\ONEDRIVE - PRIMARY SALES AUSTRALIA PTY LTD\SOLIDWORKS\TYPHOON\TY-DA-2-INS, WEDNESDAY, 11 SEPTEMBER 2024

DIMENSIONS IN MILLIMETRES
DO NOT SCALE

ITEM NO.	QTY.	PARTNO	DESCRIPTION / MATERIAL
1	1	(REFER TO VIEW)	MOUNTING PLATE
2	1	TY-CPH-2	CRANK POSITION HANDLE
3	1	TY-FBHA	FLANGED BEARING HUB ASSEMBLY
4	1	GAR-5030DU	BUSHING: 5030DU
5	1	B-112-12-CH-G5	CUP HEAD BOLT 1-2" UNC X 1.5" G5
6	1	B-N12-UNC-WIZ	HEX FLANGE NUT 1-2" UNC
7	1	B-300-12-UNC-G5	HEX BOLT 1-2" X 3" UNC G5 ZP
8	1	B-N12-UNC-NYL	NYLOC NUT - 1-2" UNC
9	2	B-200-58-CSPB	COUNTERSUNK PLOW BOLT 5-8 UNC X 2 G8 ZP
10	2	B-N58-UNC-NYL	NYLOC NUT - 5-8" UNC
11	2	B-W58-F	WASHER - FLAT 5-8" ZP

NOT REQUIRED ON D60 MODELS ***

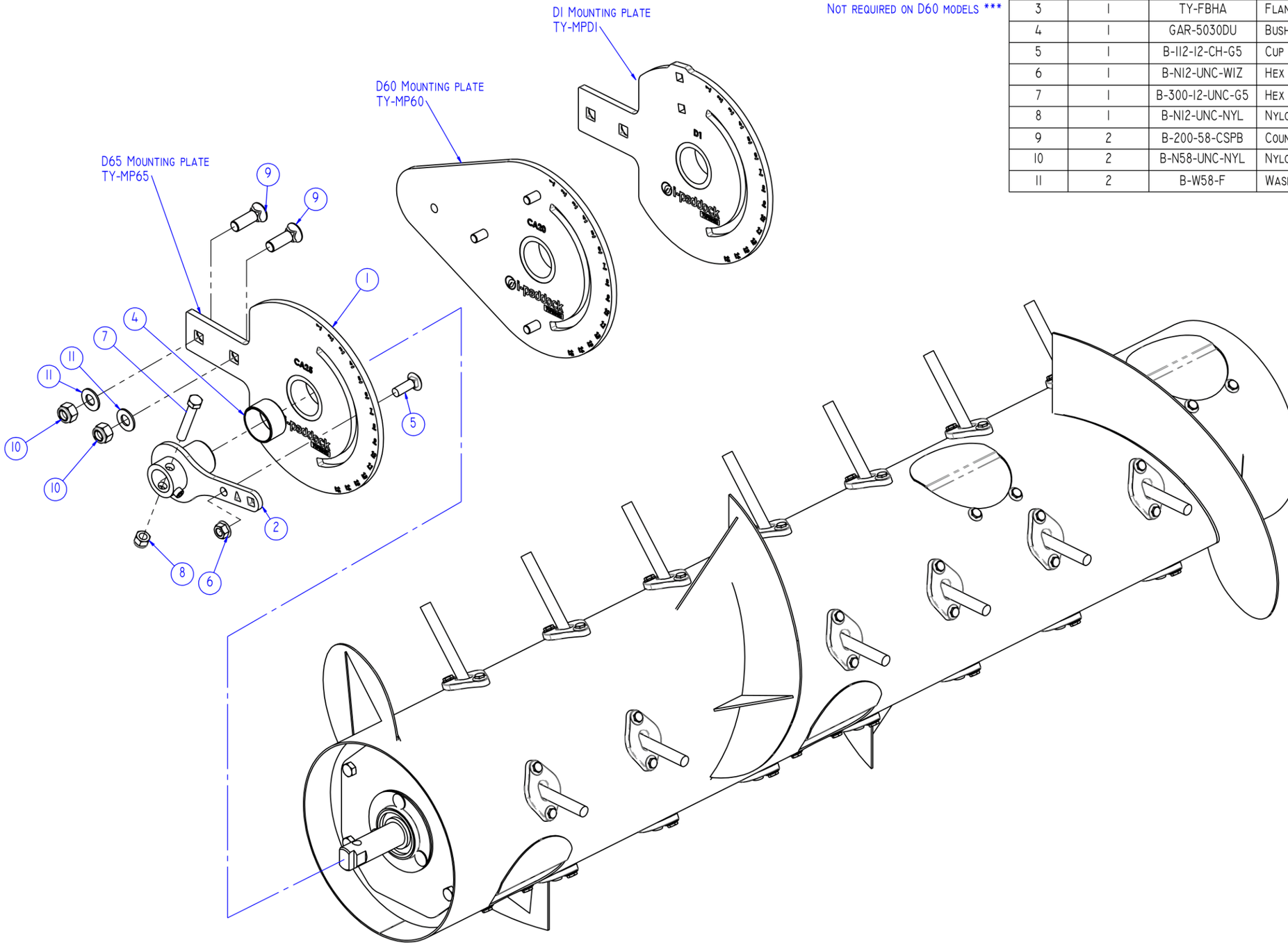

PART NUMBERS:
D60 - TY-MPA-CA20-2
D65 - TY-MPA-CA25-2
D1 / D2- TY-MPA-D1-2

REV.	DRAWING REVISION	DATE	BY	CHKD
A	ITEMS 7, 8, 10 CHANGED, 11 ADDED	11/09/2024	SBJ	SBJ

DRAWING NOTES:

© COPYRIGHT
IP Machinery Pty Ltd 2020.
All Rights Reserved.

i-paddock

A3

TITLE: IPM TYPHOON MOUNTING PLATE ASM FOR INSTRUCTIONS

DRN BY	DRN DATE	PART NO	WEIGHT(KG)
SBJ	10/8/2021	-	10.35
CHKD BY	CHKD DATE	DRAWING NO	REVISION
MF	10/8/2021	TY-MPA-2-INS	A

DIMENSIONS IN MILLIMETRES
DO NOT SCALE

2024-ONWARDS (NEW)

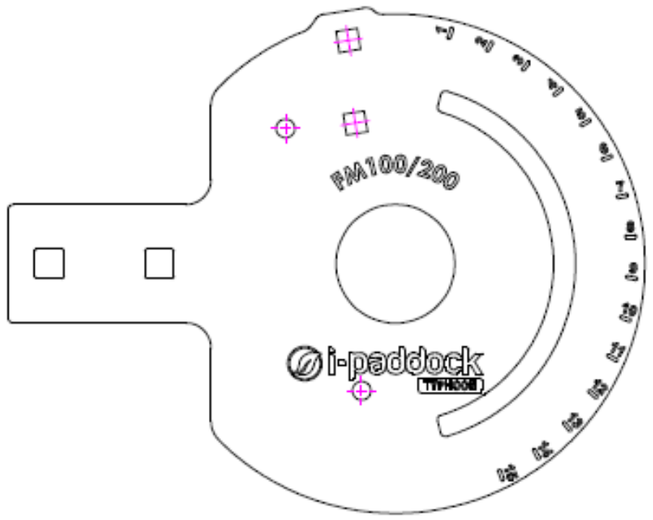

UP TO 2024 (OLD)

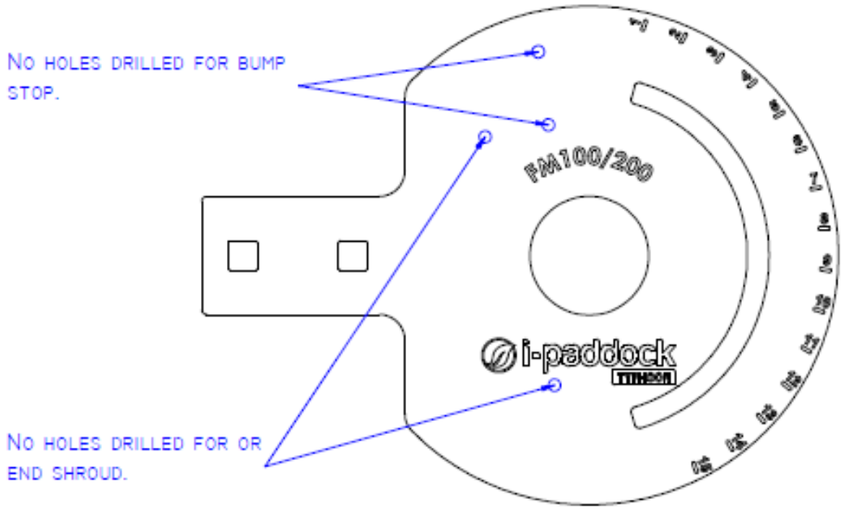

REWORKING OF OLD TO NEW

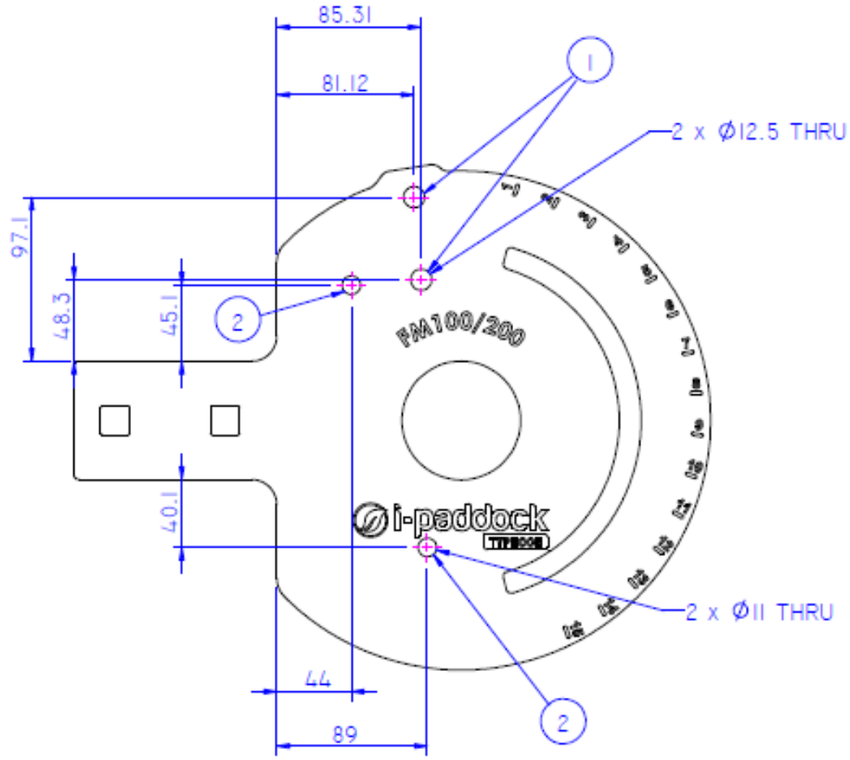

INSTRUCTIONS

1. DRILL 2 x 12.5MM HOLES AT PRESCRIBED LOCATIONS INDICATED BY NUMBERED BALLOOON 1. (BUMP STOP)
2. DRILL 2 x 11MM HOLES AT PRESCRIBED LOCATIONS INDICATED BY NUMBERED BALLOON 2. (END SHROUD)
3. PASS ITEM 2, FROM THE REAR OF THE PLATE FORWARD THORUGH EACH OF THE 12.5MM HOLES BEFORE TACK WELDING IN PLACE.

ITEM NO.	PART NUMBER	DESCRIPTION	QTY.
1	TY-MPD1	MOUNTING PLATE - D1	1
2	B-112-12-UNC-G8	1.5" x 1/2" UNC GRADE 8 BOLT	2
3	B-N12-UNC-W1Z	1/2 UNC SERRATED FLANGE NUT ZP	2

REV.	DRAWING REVISION	DATE	BY	CHKD

DRAWING NOTES:
FINISH:

TOLERANCES IF NOT SPECIFIED (COARSE SERIES)

LINEAR:	NOMINAL DIMENSION					
OVER		30	120	400	1000	6000
TO	30	120	400	1000	6000	
TOL.	±0.5	±0.8	±1.2	±2.0	±3.0	±5.0

ANGULAR:
FORMED: ±1° OTHER: ±0.5°

THIS DOCUMENT IS THE PROPERTY OF PRIMARY SALES AUSTRALIA. IT MUST NOT BE REPRODUCED, COPIED OR OTHERWISE COMMUNICATED TO ANY THIRD PARY WITHOUT THE WRITTEN CONSENT OF PRIMARY SALES AUSTRALIA.

PRIMARY SALES AUSTRALIA

A4

DRN BY: KS	DRN DATE: 24/11/2025	TITLE: REWORK LEGACY MOUNTING PLATE	
CHKD BY: JFL	CHKD DATE: 24/11/2025	PART NO: TY-MPD1-LC01	WEIGHT(KG): 5.01
		DRAWING NO: Fitting Insturctions - TY-MPD1	REVISION: -

C:\3DEXPERIENCE\R1132101972744(kshaw_ps)\Fitting Insturctions - TY-MPD1, Thursday, 27 November 2025